BOOK

M38 - B1125

Sluban

2in1

01

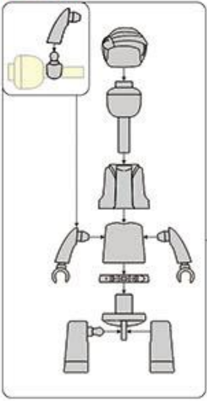

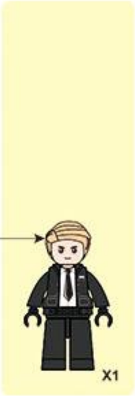

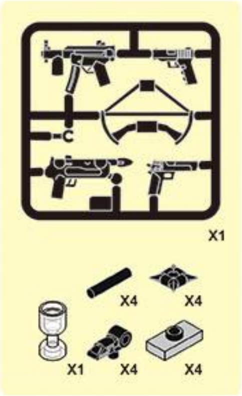
X1
X4
X4
X1
X4
X4

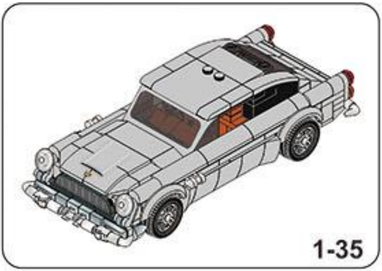

02

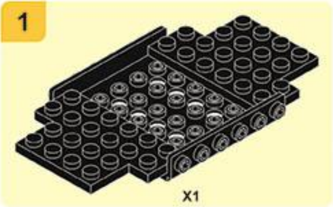

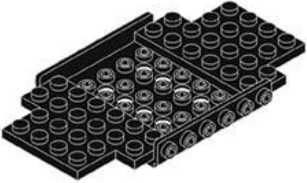

03

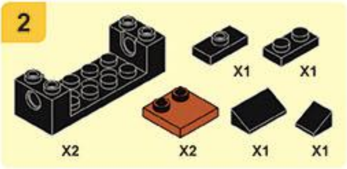
2
X1
X1
X2
X2
X1
X1

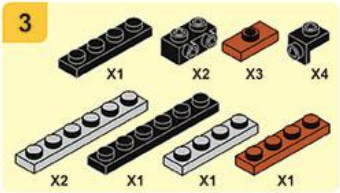
3
X1
X2
X3
X4
X2
X1
X1
X1

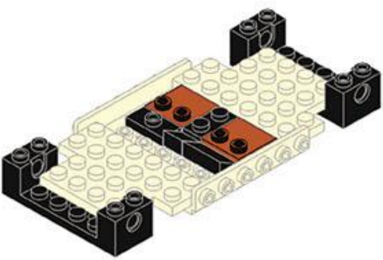

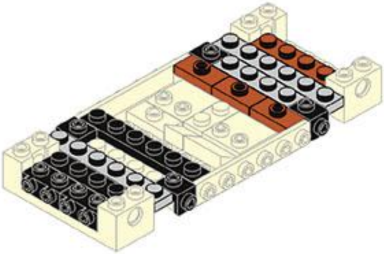

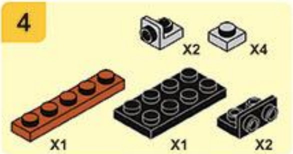
4
X2
X4
X1
X1
X2

04

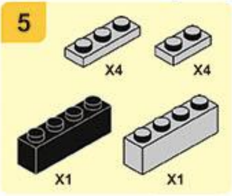

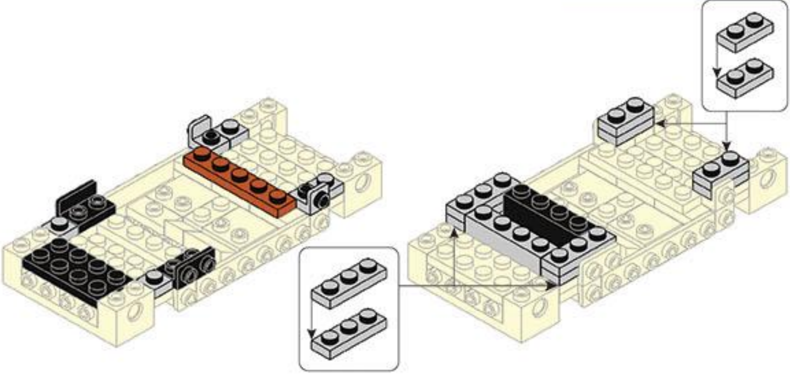

05

6

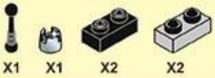

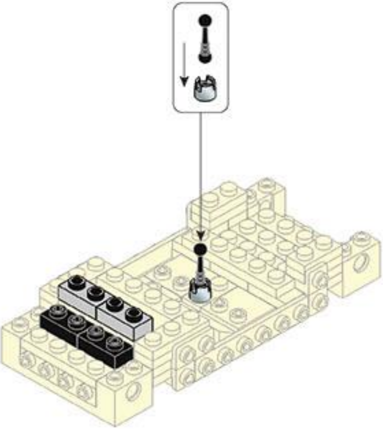

06

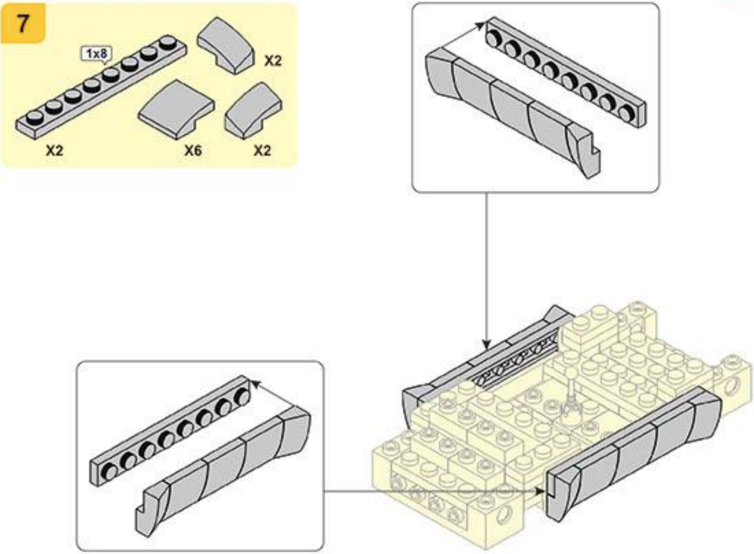
7
1x8
X2
X2
X6
X2

07

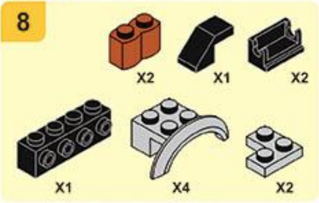
8
X2
X1
X2
X1
X4
X2

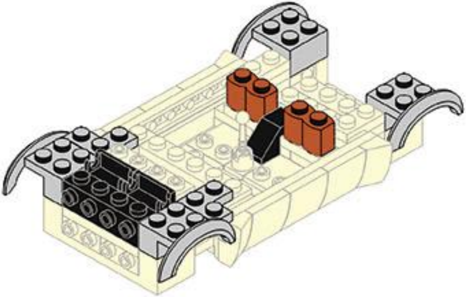

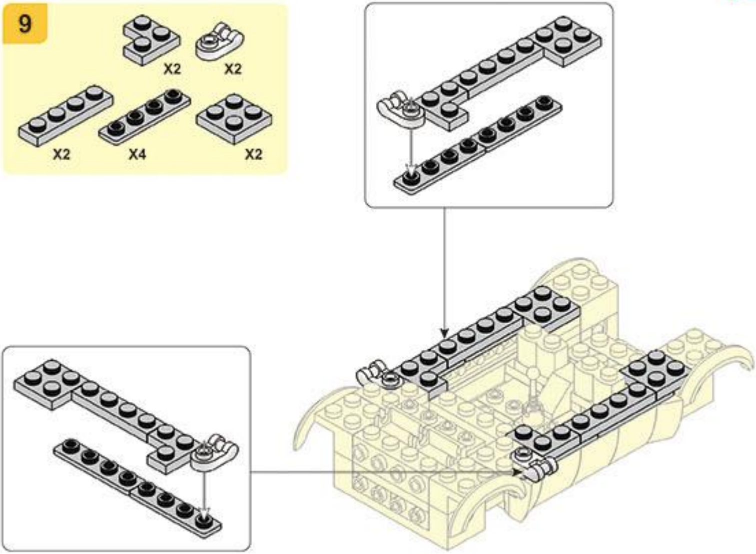
9
X2
X2
X2
X4
X2

10

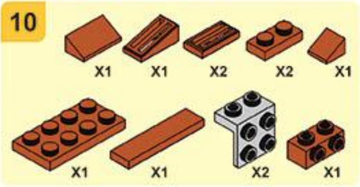
X1
X1
X2
X2
X1
X1
X1
X2
X1

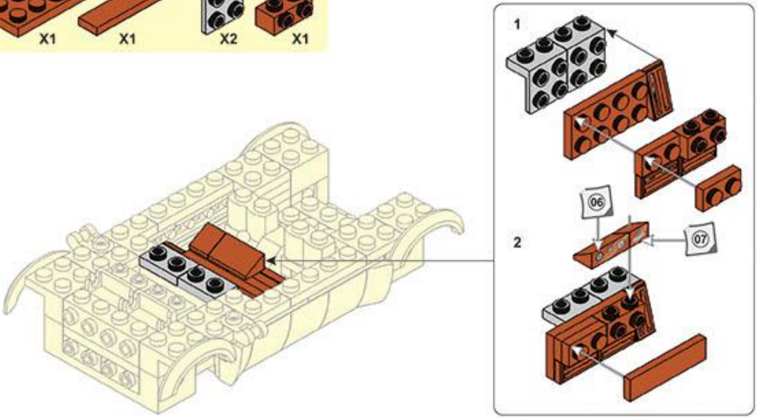

11

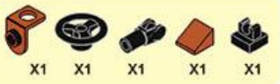
X1
X1
X1
X1
X1

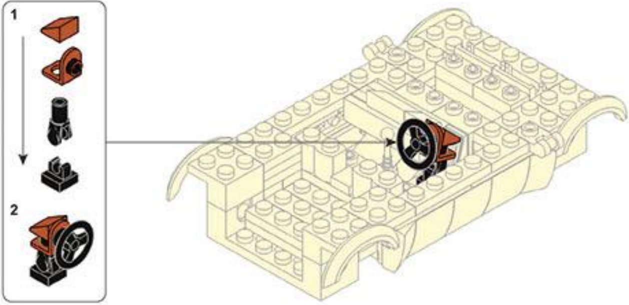

11

12

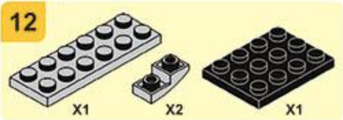

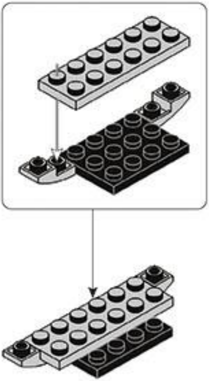

13

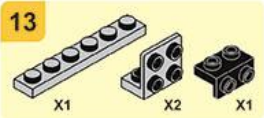

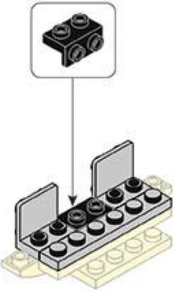

14

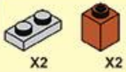

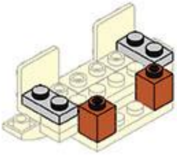

15

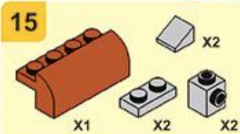

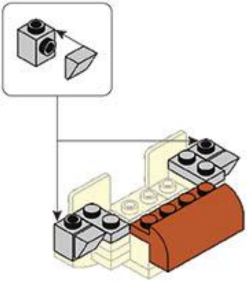

16

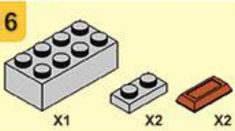

17

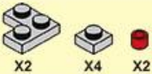

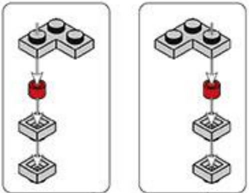

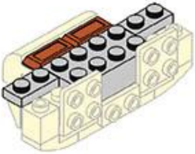

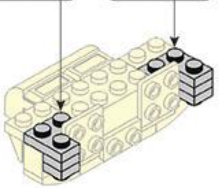

14

18

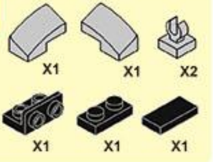
X1
X1
X2
X1
X1
X1

19

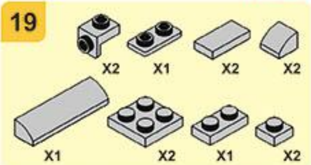
X2
X1
X2
X2
X1
X2
X1
X2

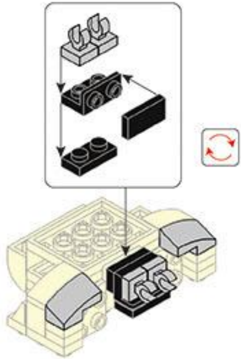

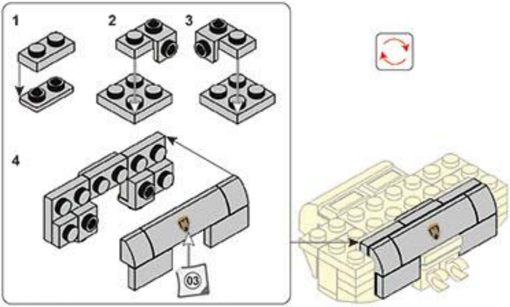

15

20

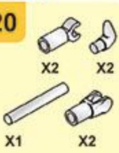

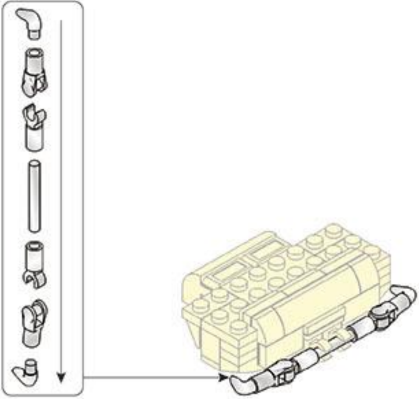

16

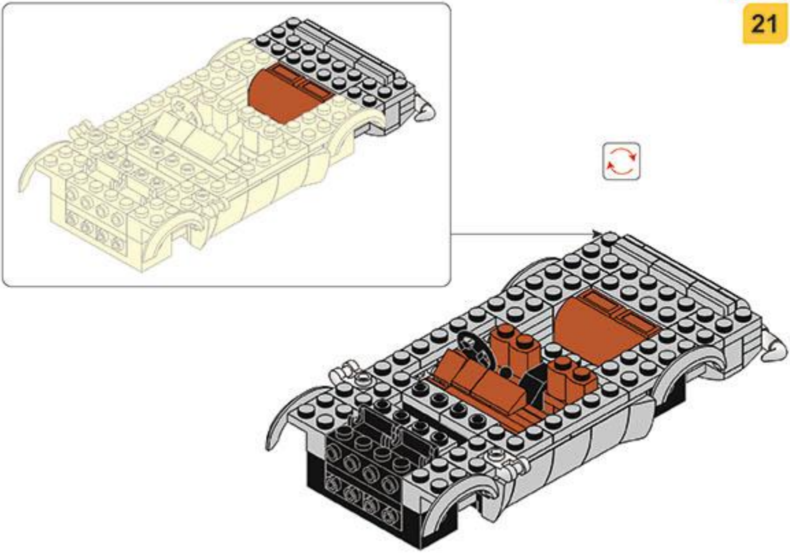

22

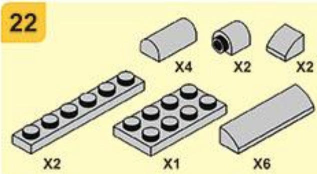
X4
X2
X2
X2
X1
X6

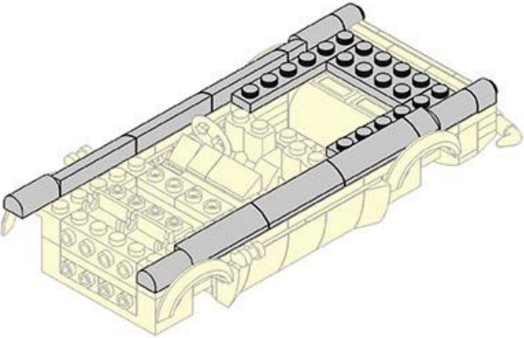

23

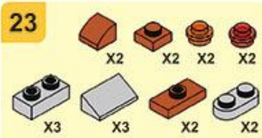
X2
X2
X2
X2
X3
X3
X2
X2

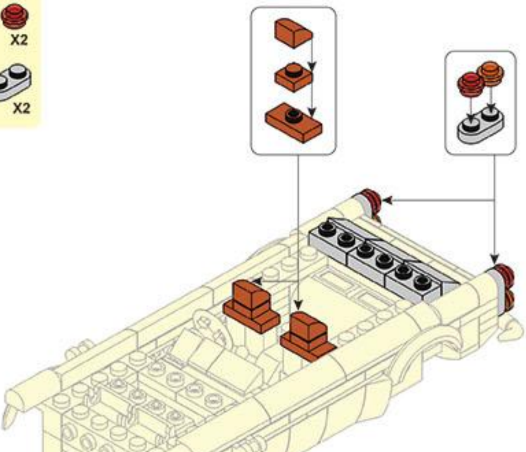

19

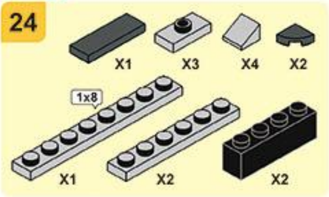
24
X1
X3
X4
X2
1x8
X1
X2
X2

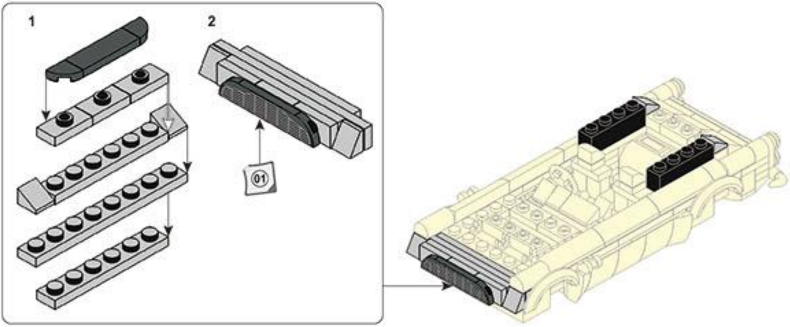

20

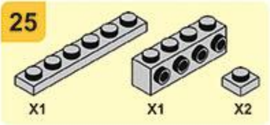

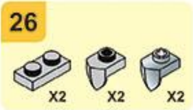

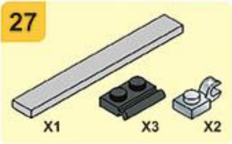

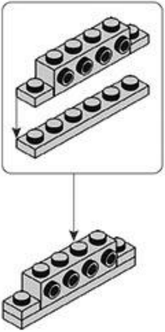

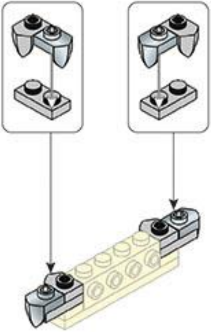

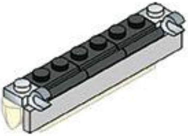

21

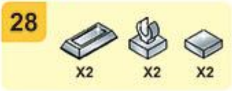

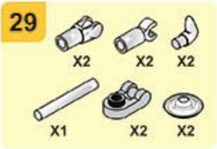
29
X2
X2
X2
X1
X2
X2

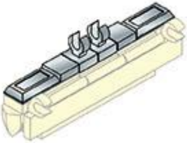

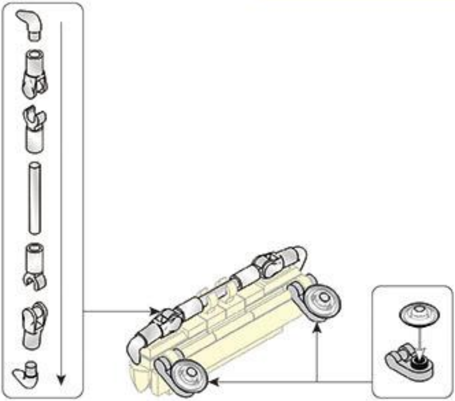

22

30

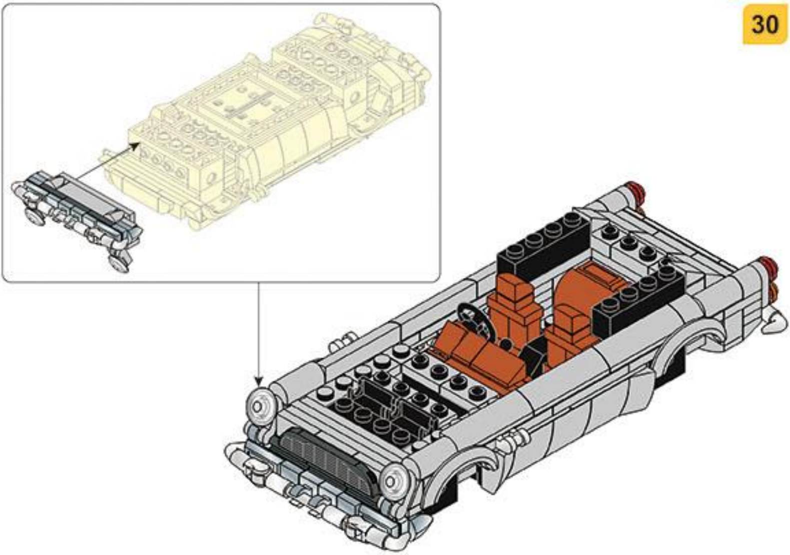

23

31

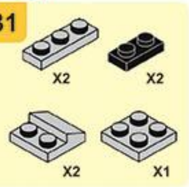

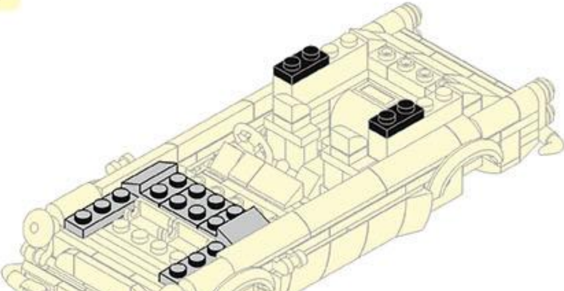

24

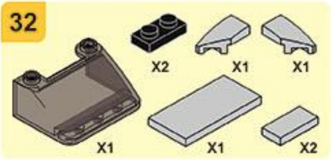
32
X2
X1
X1
X1
X1
X2

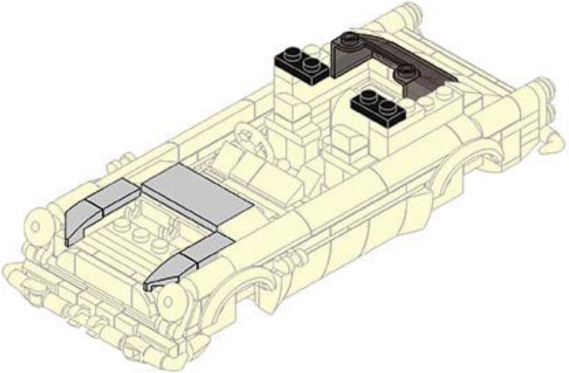

25

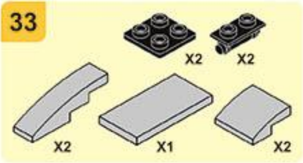
33
X2
X2
X2
X1
X2

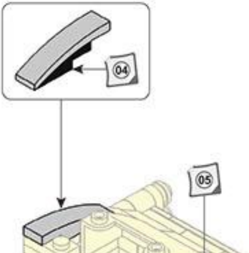

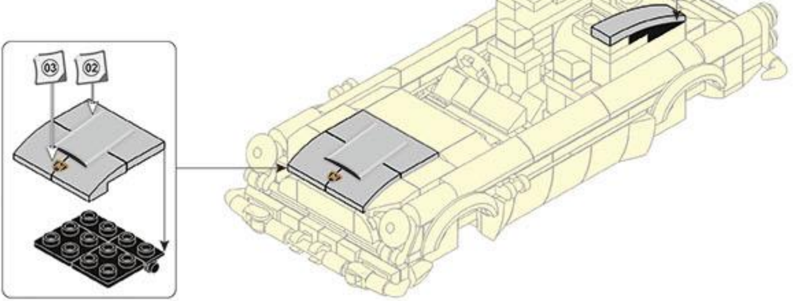

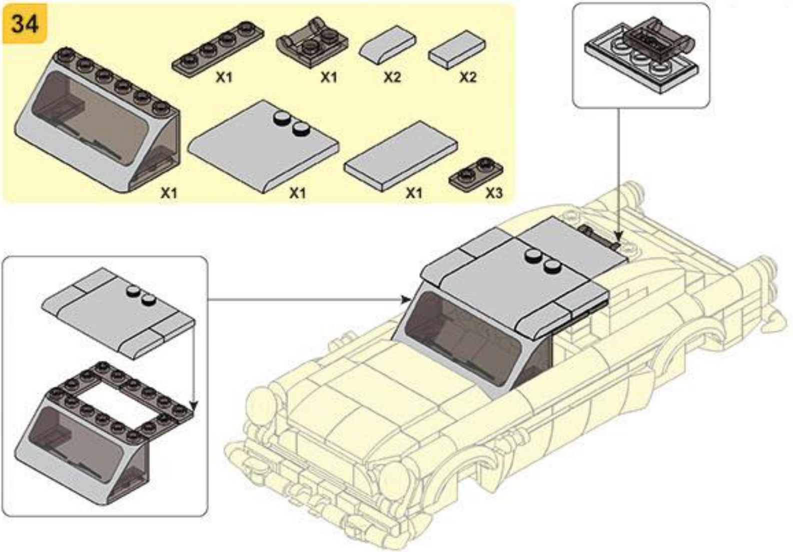
34
X1
X1
X2
X2
X1
X1
X1
X3

27

35

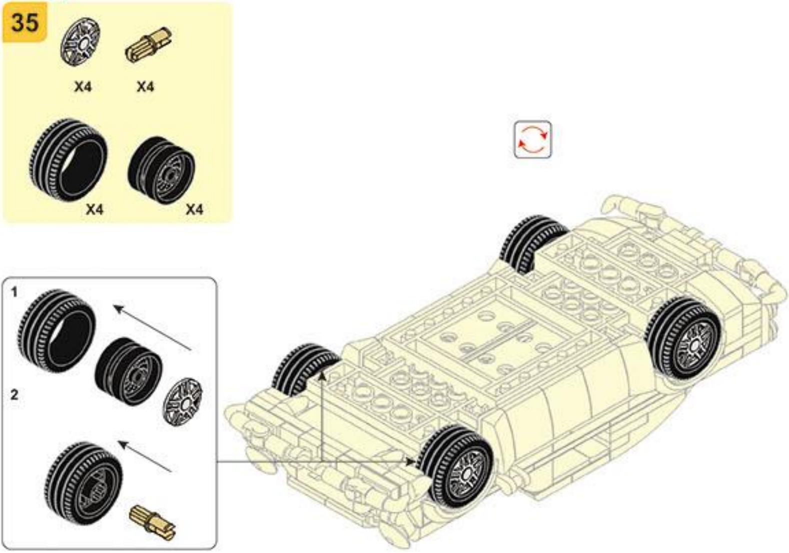
X4
X4
X4
X4
1
2

28

36

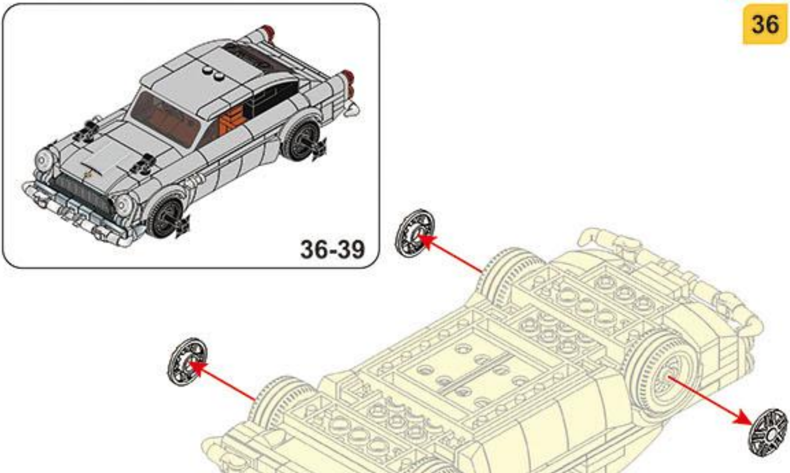

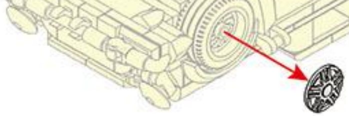

37

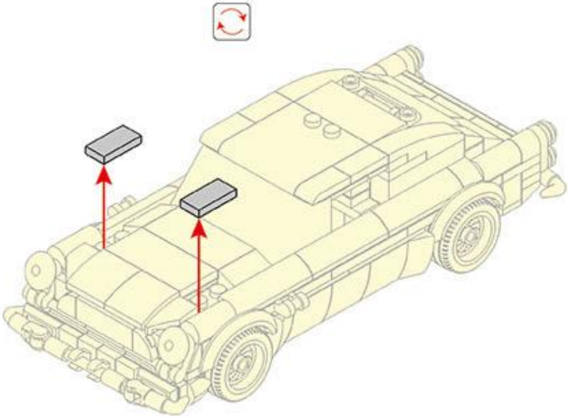

38

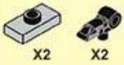

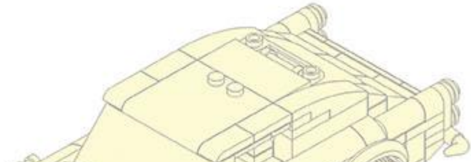

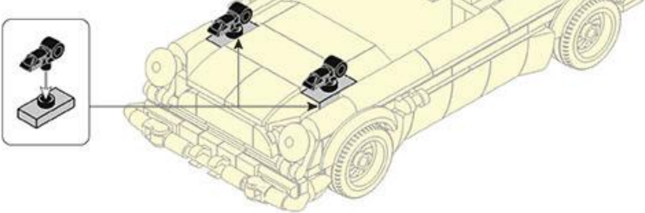

31

39

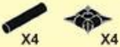

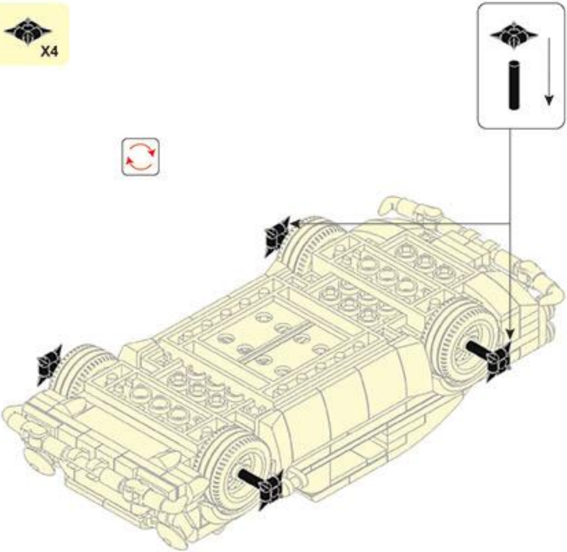

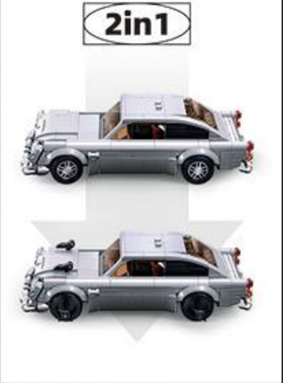

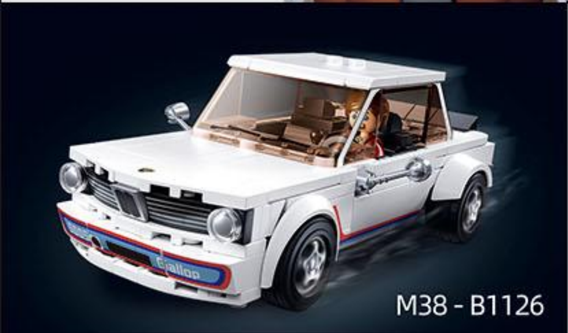

M38 - B1126

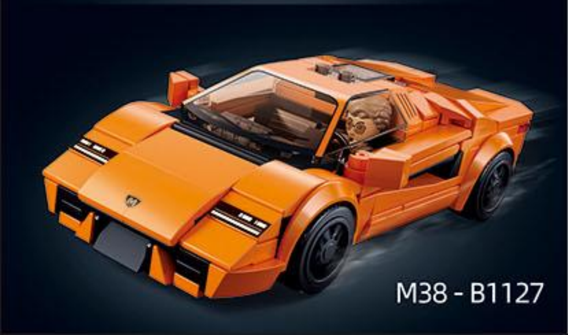

M38 - B1127

⚠ WARNING:
CHOKING HAZARD - Small parts.
Not for children under 3 years.